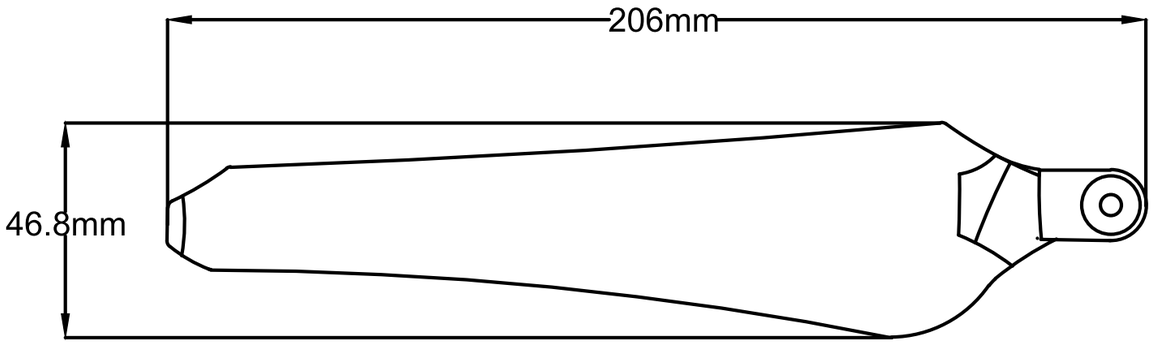

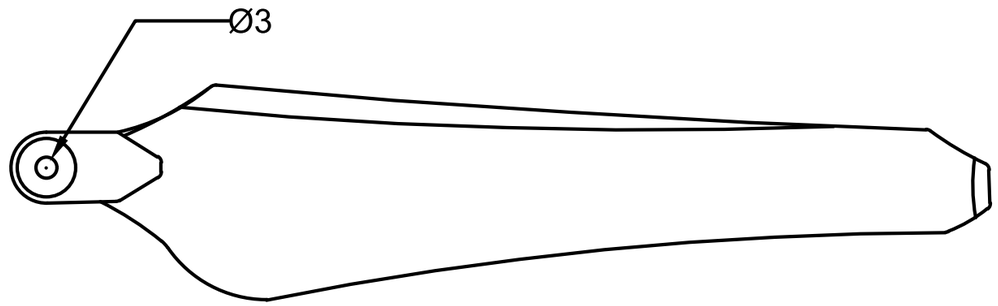

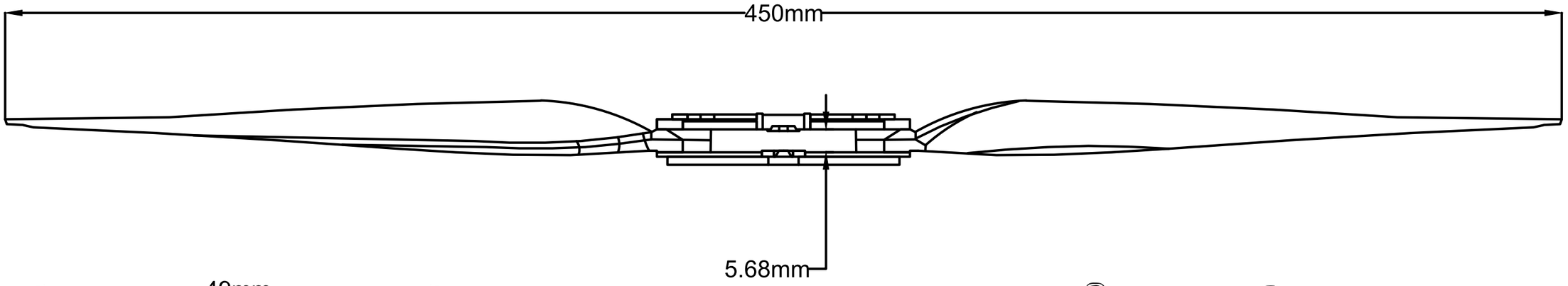

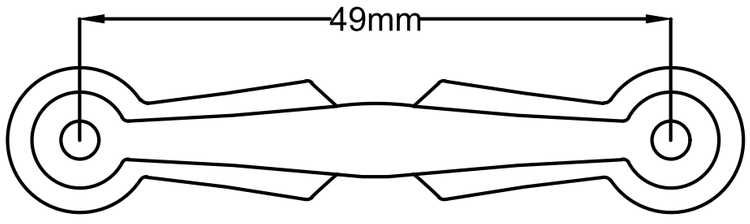

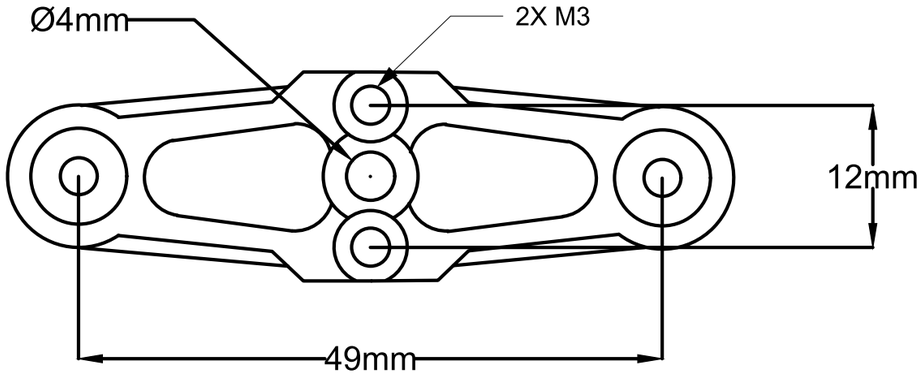

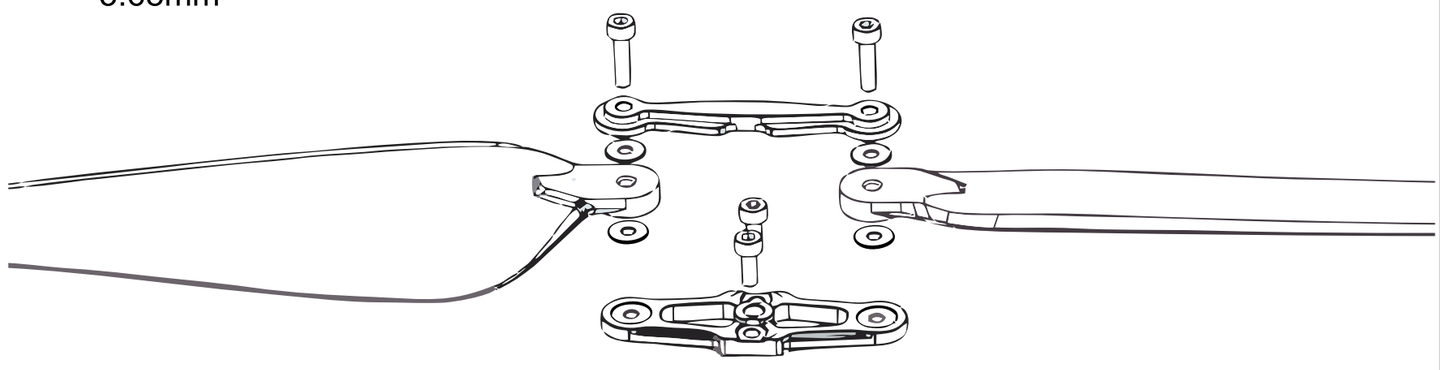

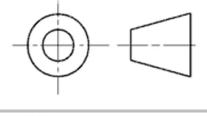

REFLEX DRIVE
Your Partner In UAV Electronics

HUB MATERIAL: Aluminium Alloy	TITLE: RD 1760 Folding Prop
WEIGHT: 46 gm	Note: All Dim in mm unless otherwise specified